Rev.no.	Revision	Date	By :	Drawer:

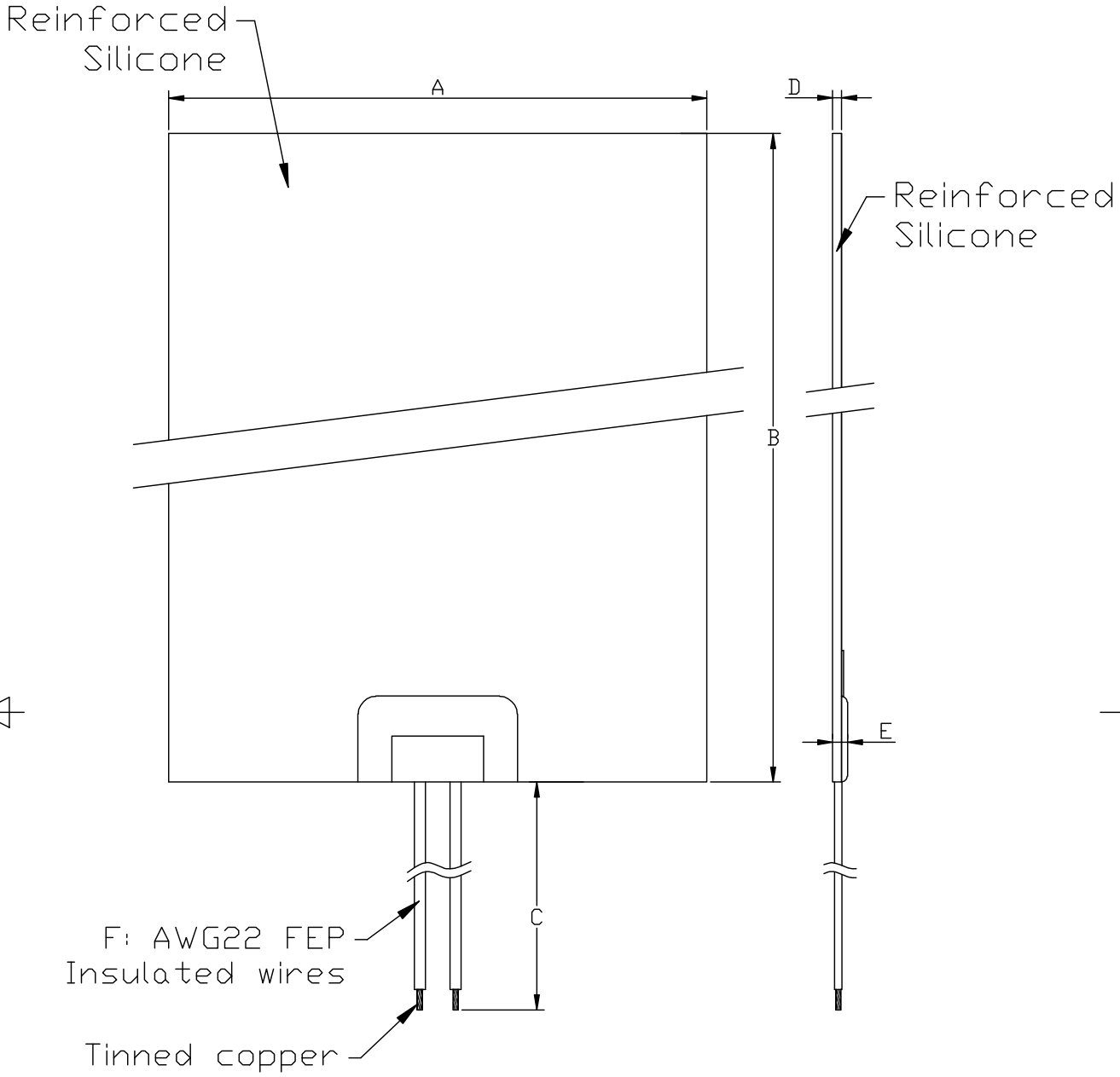

Power	Voltage	Material	W/cm²
1280W	110/115V	Silicone	0.8

QC CONTROL

	Value	Criticity	% Checked		Value	Criticity	% Checked		Value	Criticity	% Checked
A	400	–	–	D	1.6	–	–	G	-----	–	–
B	400	–	–	E	2.5	–	–	H	-----	–	–
C	200	–	–	F	AWG22 FEP	–	–	I	-----	–	–

Do not scale drawing
This print is the exclusive property of Blue Ink and cannot be reproduced in whole or in part or issued or disclosed to third parties without the expressed written consent of Blue Ink

Tool number:

Made with :

Drawn by : / Date : HJH 01/06/2011

Checked by :/ Date : J.J 01/06/2011

Raw materials: UL V0 Silicone

Scale:1/1

Blue Ink, Bangkok, Thailand

IF NOT SPECIFIED : (1)Dimensions are in mm;(2)General tolerance are ISO 2768-1.

Part Number

Page No. 1/1

9 A R 0 D 0 D 0 5 A 2 8 H 2 0 0